*** Do not display the fixed pattern for a long time when using a normally black panel, as it may cause image sticking due to the LCM structure. If the screen is displayed in fixed mode, use a screen saver.It is recommended to display the fixed mode in less than 2 minutes or less.

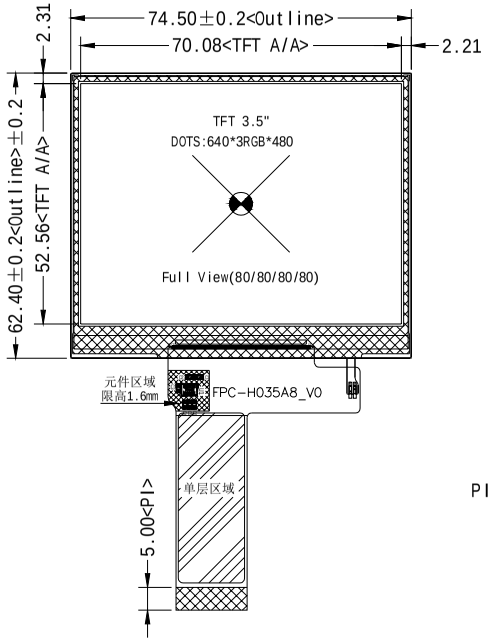

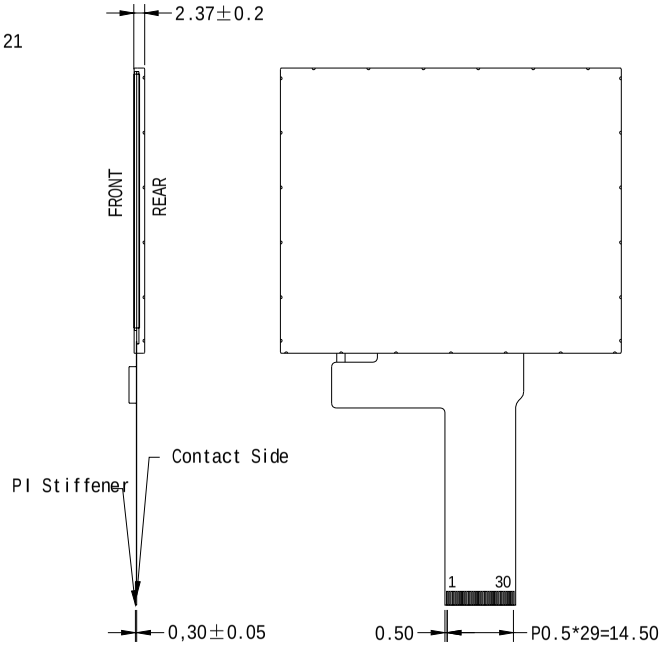

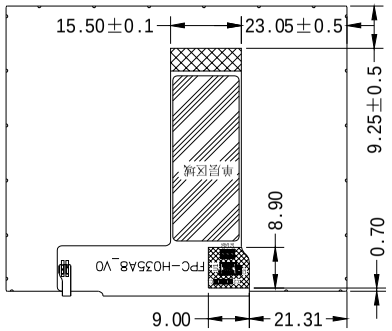

(Bend reference)

Pin	SIGNAL	Pin	SIGNAL
1	LED_K	21	GND
2	LED_K	22	GND
3	LED_A	23	NC
4	LED_A	24	GND
5	NC	25	TE
6	GND	26	RESX
7	DON	27	IOVCC
8	DOP	28	VCI
9	GND	29	GND
10	D1N	30	GND
11	D1P		
12	GND		
13	CLKN		
14	DCKP		
15	GND		
16	D2N		
17	D2P		
18	GND		
19	D3N		
20	D3P		

V1：变更元件区位置与尺寸

*1. LCD Display Type	TFT/Transmissive/Normally Black/16.7M Color		
*2. Viewing Diretion	Full View(U80/D80/R80/L80)	*6. Storage Temp	-30° C~80° C
*3. Interface	Video MIPI 1L/2L	*7. Driver IC	ST7703
*4. Operating Voltage	IOVCC=1.8V,VCI=2.8V (Typ)	*8. Backlight	12 LEDs/6 series 2 parallel
*5. Operating Temp	-20° C~70° C	*9. LCM Brightness	850 cd/m^2 (Typ)

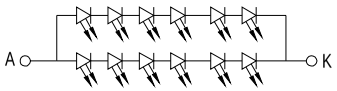

Vf=16.8~19.2V,If=40mA
Constant current test

HOTHMI

Dwg Title: TFT-H035A8VGIST8N30

Scale	Unit	Tol.
1:1	MM	±0.3

Ver:	Drawn:	Date:
V1	Liu.YL	2021-07-26